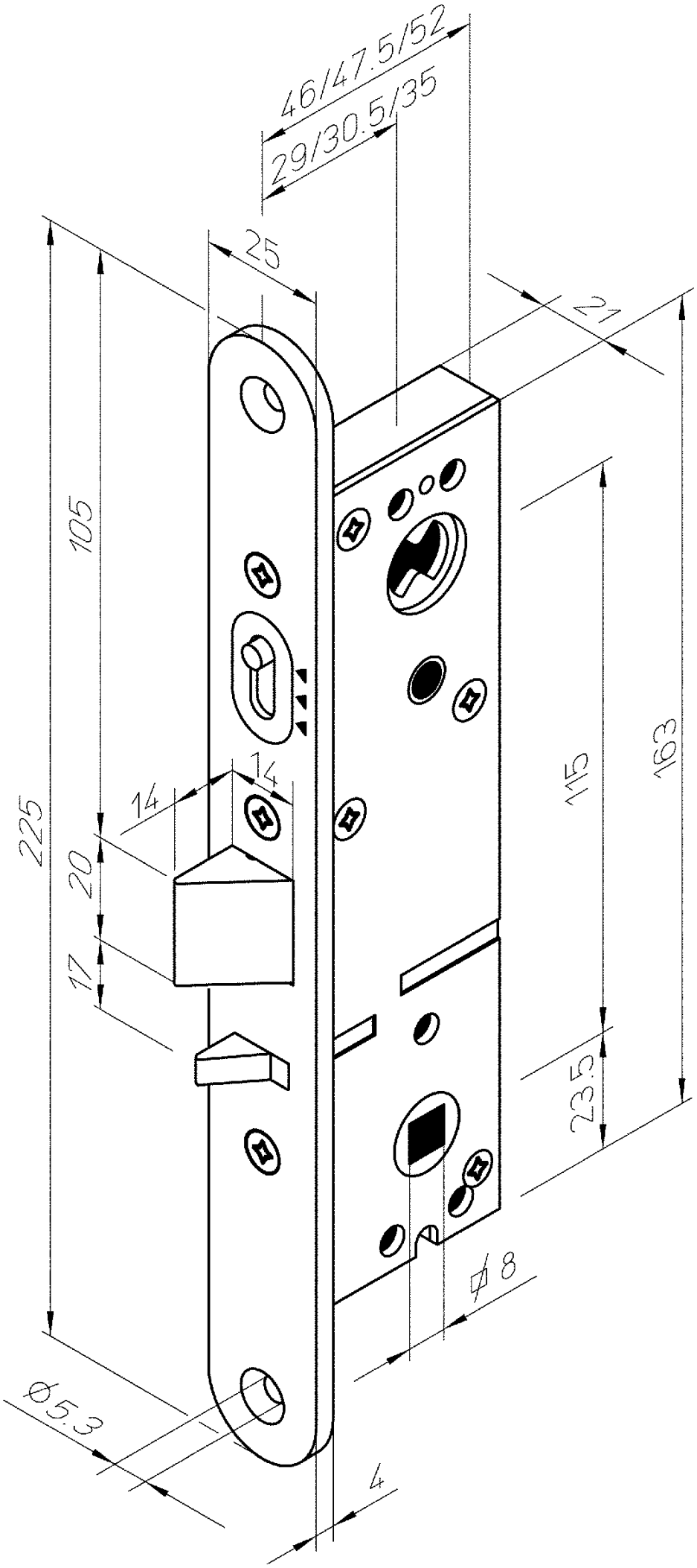
46/47.5/52
29/30.5/35
25
21
105
225
14
14
20
17
115
163
23.5
Ø 8
Ø 5.3
4